TEREX®

CROSSOVER 6000
60T capacity class
Boom truck crane
Datasheet
imperial

CROSSOVER 6000

Features

- 60 tons @ 10 ft capacity at rated distance from center of rotation
- 110 ft maximum boom length
- 118 ft maximum tip height
- 32/57 ft optional jib
- 170 ft maximum sheave height with 47 ft jib
- Operator cab – standard
- Rated capacity indicator with work area definition

WORKS FOR YOU.™

CONTENTS

Page:

Key

3

Dimensions

Crane Dimensions 4-5
Area of Operation 5
Mounting Specifications 5
Specifications 6
Range Diagram 7, 12

Load Charts

Boom 8
Jib 13

Technical Description

Boom, Jib and Rotation 17
Boom Rotation 17
Hoists and Rope 18
Hydraulics 18
Upper Operator Cab 19
Counterweight 19
Outriggers 19

KEY

Main boom	Counterweight
Boom length	Main Hoist
Tip height	Auxiliary hoist
Boom with jib	Hoist line speed
Telescoping mode	Cab
Boom angle	Operator aid
Working radius	Controls
Main boom with aux head	Hydraulics
Boom head	Heating / Air conditioning
Hook block	Outriggers
Hook to head sheave pin	Rotation / Allowable rotation range
Rope – Standard / Optional	Slewing brake
Rope diameter	Boom over the rear
Rope length	Boom over the front
Permissible line pull	Area of operation
Maximum line pull	

DIMENSIONS

Crane Dimensions

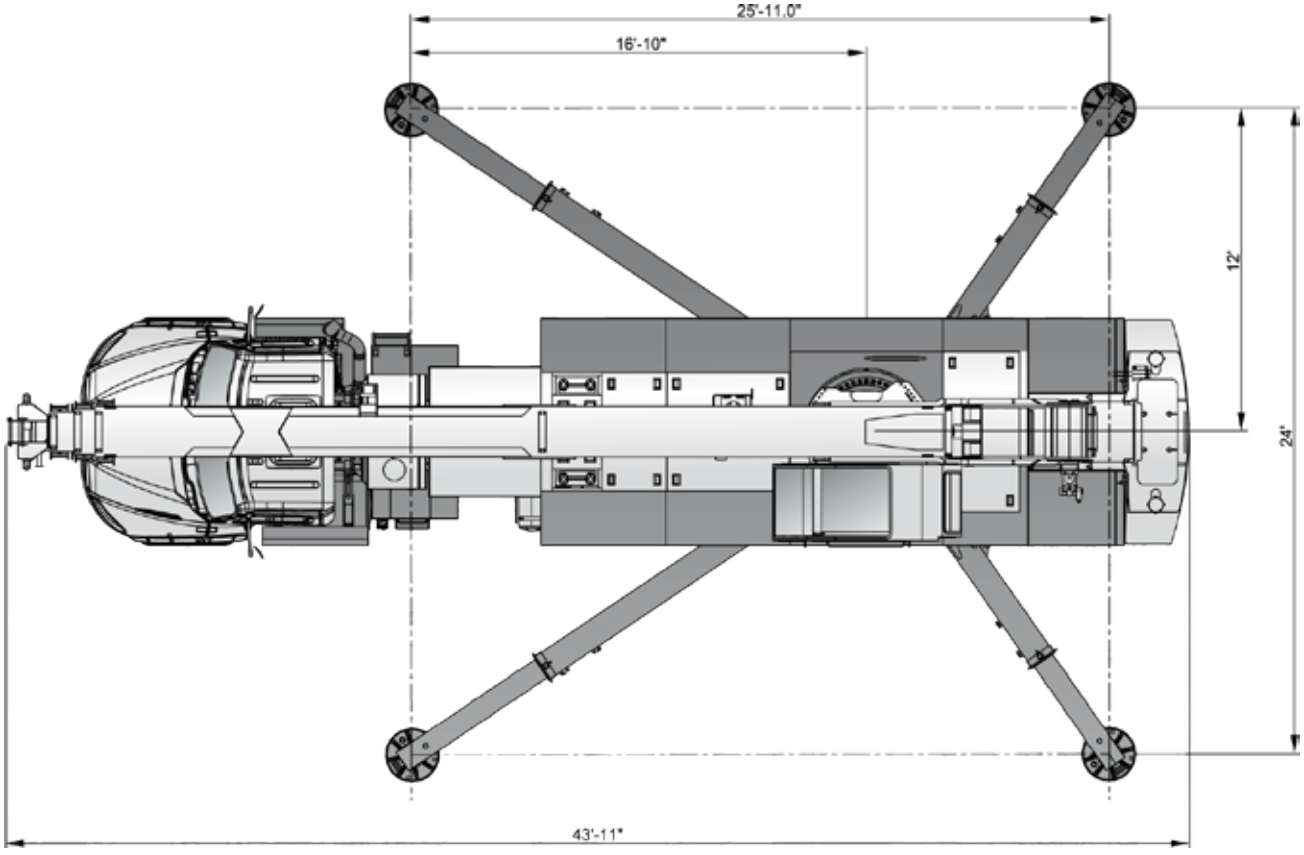

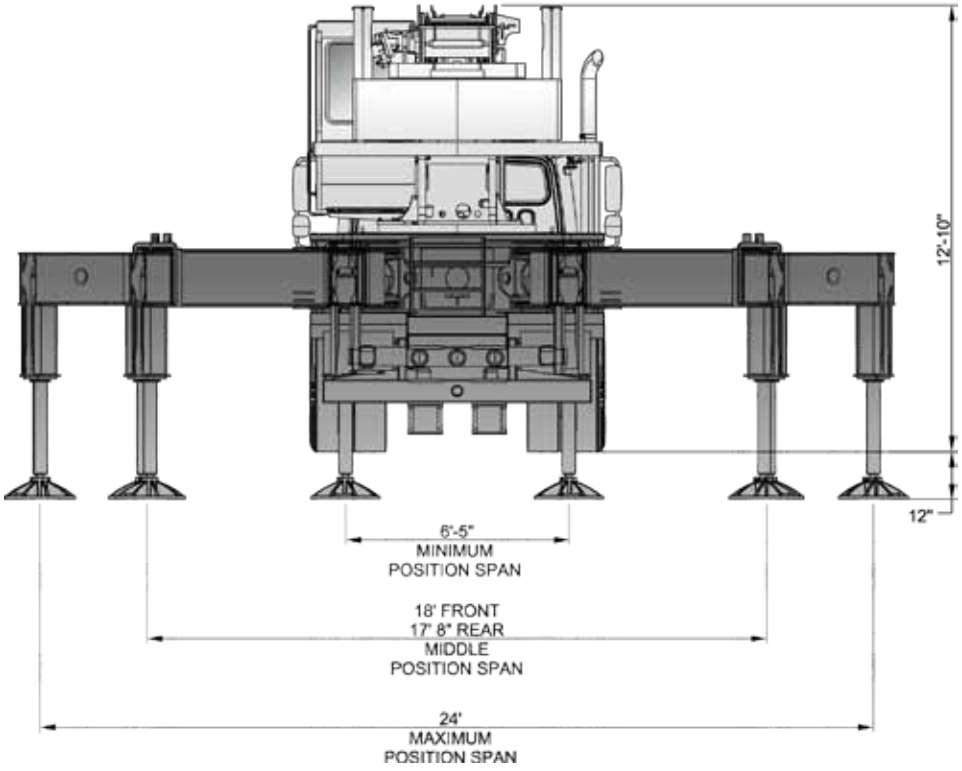

DIMENSIONS

Crane Dimensions

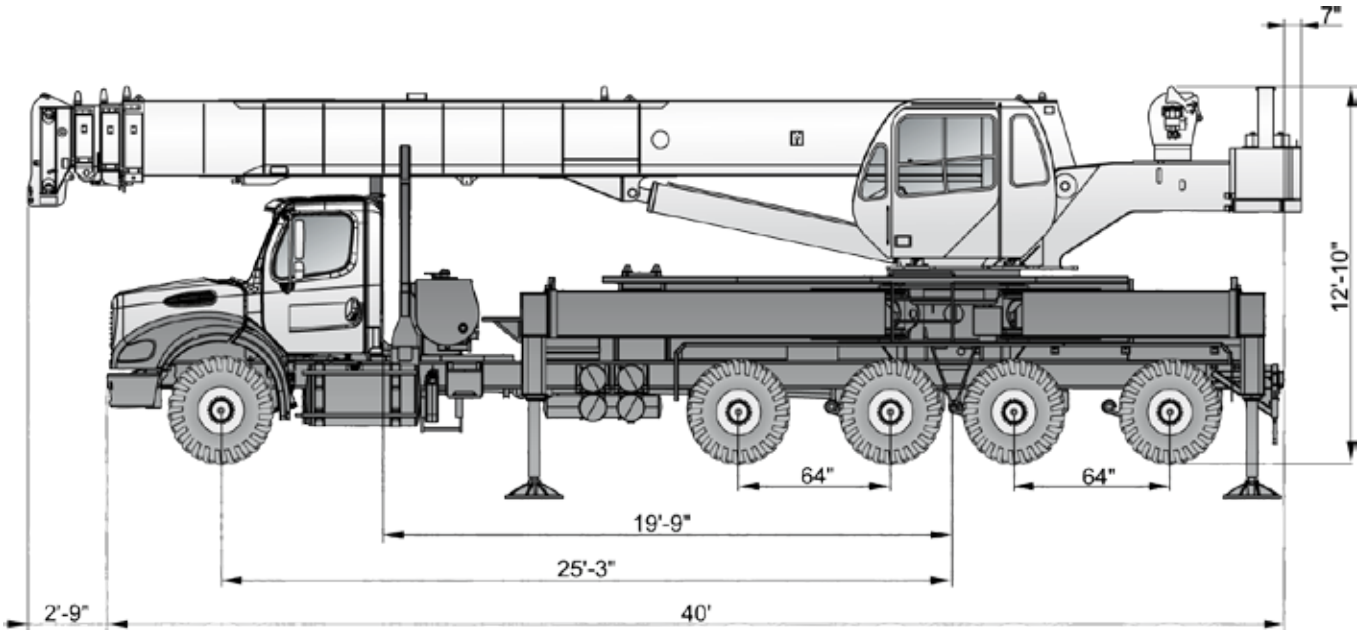

Area of Operation

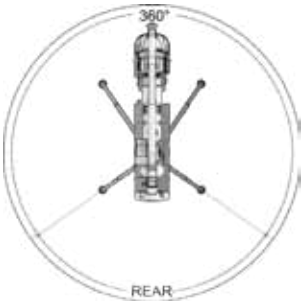

Mounting Specifications

Gross Vehicle Weight Rating	102,500 lb
Front Axle Weight Rating	20,000 lb
Rear Axle Weight Rating	40,000 lb
Pusher	20,000 lb
Tag	22,500 lb
Wheelbase	303 in
Cab to Axle	237 in
Afterframe	124 in
RBM per Frame Rail	3,300,000 lb-in
Frame Height (Unloaded)	42 in

Base machine ..... 79,500 lb
Crane fitted with jib and mounted on Freightliner chassis with flatbed.

Estimated minimum chassis weight:

Front axle	11,000 lb*
Tandem axles	13,000 lb*
Total weight	24,000 lb

* Minimum bare chassis weight requirements. Must ballast to minimum if required.

SPECIFICATIONS

CROSSOVER 6000

Approximate Crane Weights

Mounted on a Freightliner 114SD with 5 axle configuration	GVW			
Configuration: 1/4 tank fuel 200 lb operator in cab 110 ft boom / no jib Base counterweight	GVW 77 847	Front 13 910	Pusher 20 000	Tridem 43 937
Options:				
Full tank of fuel	555	424		131
2 Auxiliary winch with rope	0	0		0
33'-57' extendable jib	2 170	1 294		876
32' jib	1 270	818		452
Auxiliary winch head	100	128		– 28
60 ton 5 sheave block at bumper	1 157	1346		– 189
40 ton 4 sheave block at bumper	690	803		– 113
7 ton or 12 ton O-ball at bumper	250	291		– 41
3 000 lb counterweight on superstructure	3 000	– 1 451		4 451
3 000 lb on storage rack	3 000	1 214		1 786
7 000 lb counterweight on superstructure	7 000	– 3 385		10 385
7 000 lb on storage rack	7 000	2 832		4 168
12 000 lb counterweight on superstructure	12 000	– 5 803		17 803
12 000 lb on storage rack	12 000	4 855		7 145

RANGE DIAGRAM

Outriggers Fully Extended (100%)

CROSSOVER 6000

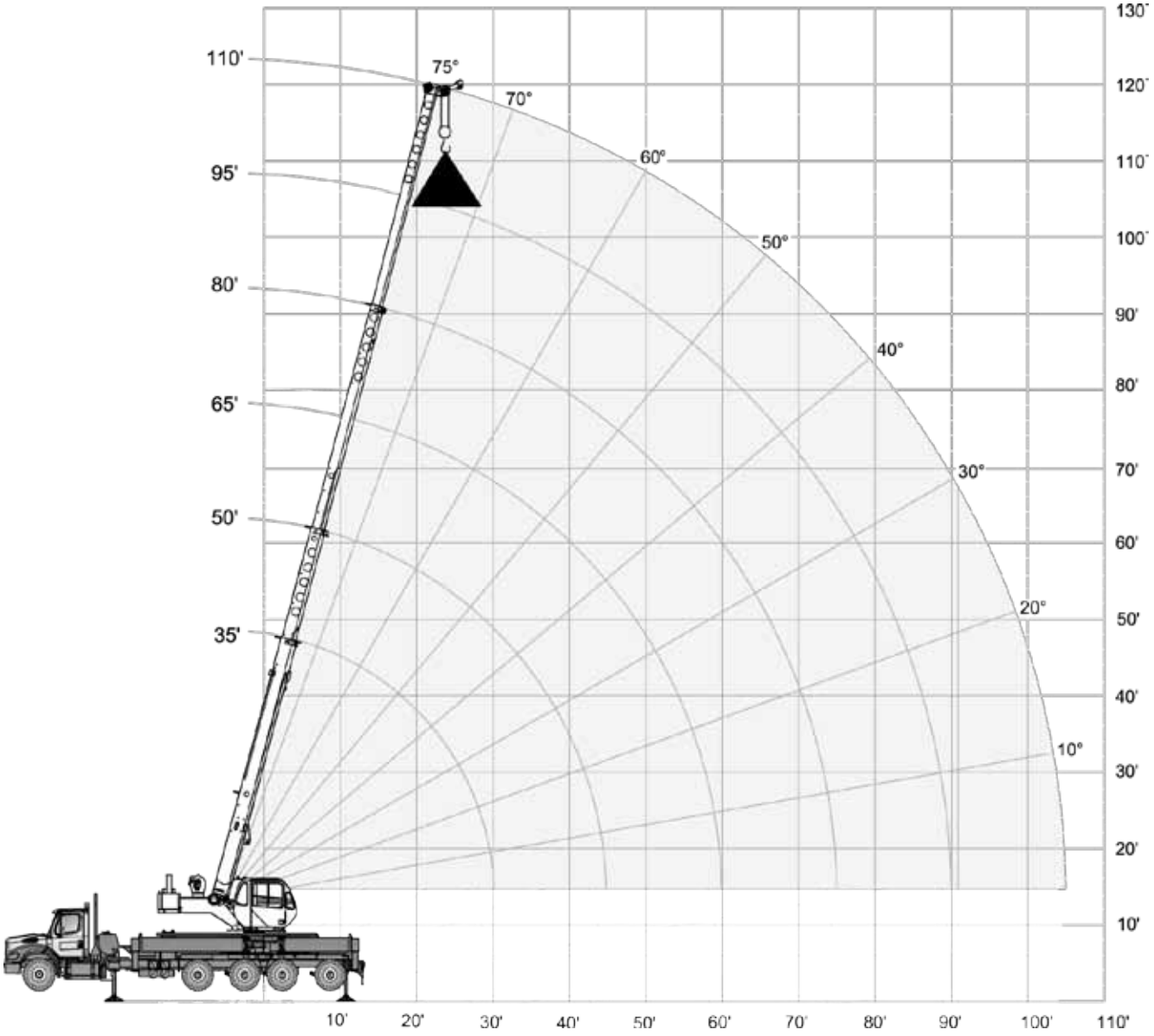

BOOM LOAD CHART

CROSSOVER 6000

Outriggers Fully Extended (100%)

16,500 lbs | (100%) | over rear | 360° | 35 to 110 ft | Standard ASME B30.5

	Boom Length												
	35 ft		50 ft		65 ft		80 ft		95 ft		110 ft		
ft	lbs	lbs	lbs	lbs	lbs	lbs	lbs	lbs	lbs	lbs	lbs	lbs	ft
10	120,000	120,000	80,000	80,000									10
12	107,000	100,700	80,000	80,000									12
15	87,100	87,100	78,400	78,400	61,900	61,900							15
20	62,900	62,900	64,200	64,200	54,800	54,800	46,200	46,200					20
25	48,300	48,300	49,600	49,600	49,100	49,100	40,700	40,700	35,300	35,300			25
30	36,800	36,800	39,800	39,800	40,500	40,500	36,000	36,000	31,100	31,100	27,500	27,500	30
35			32,800	32,800	33,500	33,500	32,200	32,200	27,900	27,900	24,800	24,800	35
40			27,500	27,500	28,200	28,200	28,600	28,600	25,200	25,200	22,500	22,500	40
45			22,200	22,200	24,100	24,100	24,600	24,500	23,100	23,100	20,500	20,500	45
50					20,200	20,100	21,100	20,500	21,300	20,700	18,800	18,800	50
55					17,600	17,000	18,100	17,400	18,300	17,600	17,400	17,400	55
60					14,700	14,400	15,600	14,900	15,900	15,100	15,200	15,000	60
65							13,600	12,900	13,900	13,200	13,300	13,200	65
70							11,900	11,200	12,200	11,500	11,600	11,500	70
75							9,700	9,700	10,800	10,100	10,300	10,100	75
80									9,600	8,900	9,100	8,800	80
85									8,500	7,800	8,000	7,800	85
90									7,000	6,900	7,100	6,800	90
95											6,300	6,000	95
100											5,600	5,300	100
105											4,900	4,600	105

Notes to lifting capacity

Lifting capacities do not exceed 85% of tipping load. Weight of hook blocks and slings is part of the load, and is to be deducted from the capacity ratings. Consult operation manual for further details.

Note: Data published herein is intended as a guide only and shall not be construed to warrant applicability for lifting purposes. Crane operation is subject to the computer charts and operation manual both supplied with the crane.

TEREX®

BOOM LOAD CHART

CROSSOVER 6000

Outriggers Fully Extended (100%)

11,500 lbs | (100%) | over rear | 360° | 35 to 110 ft | Standard ASME B30.5

	Boom Length												
	35 ft		50 ft		65 ft		80 ft		95 ft		110 ft		
ft	lbs	lbs	lbs	lbs	lbs	lbs	lbs	lbs	lbs	lbs	lbs	lbs	ft
10	120,000	120,000	80,000	80,000									10
12	106,800	98,500	80,000	80,000									12
15	83,700	80,800	78,400	78,400	61,900	61,900							15
20	60,400	60,400	61,600	61,600	54,800	54,800	46,200	46,200					20
25	46,200	46,200	47,600	47,600	48,200	48,200	40,700	40,700	35,300	35,300			25
30	36,600	36,600	38,100	38,100	38,800	38,800	36,000	36,000	31,100	31,100	27,500	27,500	30
35			31,400	31,400	32,000	32,000	32,200	32,200	28,000	27,900	24,800	24,800	35
40			26,200	25,600	27,000	26,300	27,400	26,600	25,200	25,200	22,500	22,500	40
45			21,400	20,400	22,300	21,300	22,700	21,600	22,800	21,800	20,600	20,500	45
50					18,700	17,600	19,100	17,900	19,300	18,100	18,800	18,300	50
55					15,800	14,600	16,300	15,100	16,500	15,300	16,600	15,400	55
60					13,400	12,300	14,000	12,800	14,300	13,000	14,400	13,200	60
65							12,100	10,900	12,400	11,200	12,500	11,300	65
70							10,500	9,400	10,800	9,700	11,000	9,800	70
75							9,100	8,000	9,500	8,400	9,700	8,500	75
80									8,300	7,300	8,500	7,400	80
85									7,300	6,300	7,500	6,500	85
90									6,400	5,400	6,600	5,700	90
95											5,900	4,900	95
100											5,200	4,200	100
105											4,500	3,600	105

Notes to lifting capacity

Lifting capacities do not exceed 85% of tipping load. Weight of hook blocks and slings is part of the load, and is to be deducted from the capacity ratings. Consult operation manual for further details.

Note: Data published herein is intended as a guide only and shall not be construed to warrant applicability for lifting purposes. Crane operation is subject to the computer charts and operation manual both supplied with the crane.

BOOM LOAD CHART

CROSSOVER 6000

Outriggers Fully Extended (100%)

7,500 lbs | (100%) | over rear | 360° | 35 to 110 ft | Standard ASME B30.5

	Boom Length												
	35 ft		50 ft		65 ft		80 ft		95 ft		110 ft		
ft	lbs	lbs	lbs	lbs	lbs	lbs	lbs	lbs	lbs	lbs	lbs	lbs	ft
10	120,000	120,000	80,000	80,000									10
12	103,400	96,800	80,000	80,000									12
15	81,000	79,100	78,400	78,400	61,900	61,900							15
20	58,300	58,300	59,600	59,600	54,800	54,800	46,200	46,200					20
25	44,600	42,600	45,900	45,900	46,600	46,600	40,700	40,700	35,300	35,300			25
30	35,300	33,300	36,800	36,800	37,400	37,400	36,000	36,000	31,100	31,100	27,500	27,500	30
35			29,100	29,500	29,700	30,100	30,000	30,500	27,900	27,900	24,800	24,800	35
40			23,100	22,900	23,900	23,600	24,200	23,900	24,400	24,100	22,500	22,500	40
45			18,700	18,100	19,600	19,000	19,900	19,300	20,100	19,500	20,300	19,700	45
50					16,300	15,600	16,700	15,900	16,900	16,100	17,000	16,300	50
55					13,700	12,900	14,200	13,300	14,400	13,500	14,500	13,700	55
60					11,600	10,700	12,100	11,300	12,400	11,500	12,500	11,600	60
65							10,400	9,600	10,700	9,800	10,800	9,900	65
70							9,000	8,100	9,300	8,400	9,500	8,600	70
75							7,700	6,900	8,100	7,200	8,300	7,400	75
80									7,000	6,200	7,200	6,400	80
85									6,100	5,300	6,300	5,500	85
90									5,200	4,500	5,500	4,800	90
95											4,800	4,100	95
100											4,000	3,400	100
105											3,300	2,900	105

Notes to lifting capacity

Lifting capacities do not exceed 85% of tipping load. Weight of hook blocks and slings is part of the load, and is to be deducted from the capacity ratings. Consult operation manual for further details.

Note: Data published herein is intended as a guide only and shall not be construed to warrant applicability for lifting purposes. Crane operation is subject to the computer charts and operation manual both supplied with the crane.

BOOM LOAD CHART

CROSSOVER 6000

Outriggers Fully Extended (100%)

4,500 lbs | (100%) | over rear | 360° | 35 to 110 ft | Standard ASME B30.5

	Boom Length												
	35 ft		50 ft		65 ft		80 ft		95 ft		110 ft		
ft	lbs	lbs	lbs	lbs	lbs	lbs	lbs	lbs	lbs	lbs	lbs	lbs	ft
10	120,000	120,000	80,000	80,000									10
12	100,900	100,900	80,000	80,000									12
15	78,900	78,900	78,400	78,400	61,900	61,900							15
20	56,800	56,800	58,100	58,100	54,800	54,800	46,200	46,200					20
25	43,400	43,400	44,700	44,700	45,300	45,300	40,700	40,700	35,300	35,300			25
30	34,200	33,800	35,700	35,600	36,400	36,200	36,000	36,000	31,100	31,100	27,500	27,500	30
35			28,300	27,200	28,900	27,800	29,200	28,700	27,900	27,900	24,800	24,800	35
40			22,400	21,400	23,200	22,200	23,500	22,300	23,700	22,600	22,500	22,500	40
45			18,100	17,100	19,000	18,000	19,400	17,900	19,500	18,100	19,700	18,300	45
50					15,800	14,900	16,200	14,600	16,400	14,800	16,500	15,000	50
55					13,300	12,400	13,700	12,100	14,000	12,300	14,100	12,400	55
60					11,200	10,300	11,700	10,100	12,000	10,300	12,100	10,500	60
65							10,100	8,400	10,400	8,700	10,500	8,800	65
70							8,700	7,000	9,000	7,300	9,200	7,500	70
75							7,400	5,800	7,800	6,200	8,000	6,300	75
80									6,800	5,200	7,000	5,400	80
85									5,900	4,300	6,100	4,500	85
90									5,000	3,500	5,300	3,800	90
95											4,600	3,100	95
100											4,000	2,500	100
105											3,400	2,000	105

Notes to lifting capacity

Lifting capacities do not exceed 85% of tipping load. Weight of hook blocks and slings is part of the load, and is to be deducted from the capacity ratings. Consult operation manual for further details.

Note: Data published herein is intended as a guide only and shall not be construed to warrant applicability for lifting purposes. Crane operation is subject to the computer charts and operation manual both supplied with the crane.

RANGE DIAGRAM

With Jib

CROSSOVER 6000

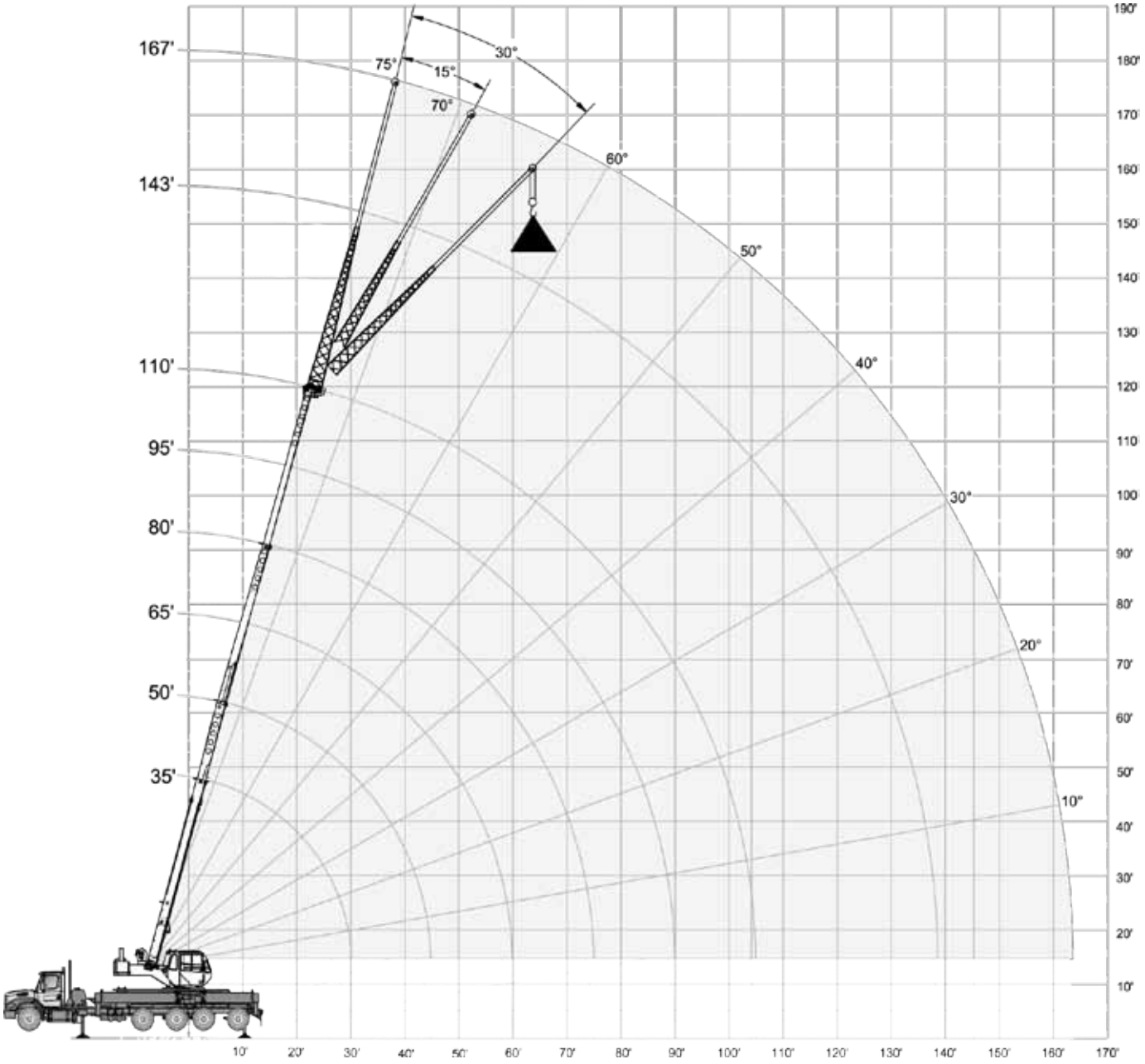

TEREX®

LOAD CHART

CROSSOVER 6000

With Jib, Extended

16,500 lbs (100%) 360°

Standard ASME B30.5

32 ft Offsettable Jib								
0°			15°			30°		
ft	lbs	lbs	ft	lbs	lbs	ft	lbs	lbs
36	12,500	12,500	47	8,500	8,500	53	6,400	6,400
42	11,800	11,800	52	8,100	8,100	58	6,200	6,200
47	11,200	11,200	57	7,800	7,800	62	6,100	6,100
55	10,300	10,300	64	7,500	7,500	69	5,900	5,900
63	9,500	9,500	71	7,100	7,100	75	5,900	5,900
70	8,800	8,800	77	6,700	6,700	81	5,600	5,600
77	8,200	8,200	83	6,400	6,400	87	5,400	5,400
85	7,600	7,600	91	6,200	6,200	94	5,300	5,300
93	7,100	7,100	98	5,900	5,900	101	5,200	5,200
100	6,700	6,700	105	5,600	5,600	107	5,100	5,100
107	6,100	5,700	111	5,400	5,400	113	5,000	5,000
114	5,300	4,800	117	5,000	4,700	119	5,000	4,600
122	4,500	4,000	124	4,300	3,900	125	4,300	3,900
128	3,800	3,200	129	3,700	3,100			
134	3,100	2,500	134	3,000	3,000			
137	400	400						

57 ft Offsettable Jib								
0°			15°			30°		
ft	lbs	lbs	ft	lbs	lbs	ft	lbs	lbs
48	6,500	6,500	63	4,500	4,500	73	3,300	3,300
54	6,400	6,400	69	4,300	4,300	78	3,200	3,200
60	6,200	6,200	74	4,100	4,100	83	3,100	3,100
69	6,000	6,000	82	3,900	3,900	90	3,000	3,000
78	5,400	5,400	90	3,700	3,700	97	2,900	2,900
86	4,900	4,900	97	3,500	3,500	103	2,800	2,800
94	4,500	4,500	104	3,300	3,300	109	2,700	2,700
103	4,200	4,200	112	3,100	3,100	117	2,600	2,600
112	3,800	3,800	120	2,900	2,900	124	2,500	2,500
120	3,500	3,500	127	2,800	2,800	130	2,500	2,500
128	3,300	3,300	134	2,700	2,700	136	2,400	2,400
136	3,100	3,100	141	2,600	2,600	142	2,400	2,400
145	2,900	2,800	148	2,500	2,500	149	2,400	2,400
153	2,400	2,100	155	2,400	2,000			
159	2,000	1,700	160	2,000	1,600			
164	300	300						

Notes to lifting capacity

Lifting capacities do not exceed 85% of tipping load. Weight of hook blocks and slings is part of the load, and is to be deducted from the capacity ratings. Consult operation manual for further details.

Note: Data published herein is intended as a guide only and shall not be construed to warrant applicability for lifting purposes. Crane operation is subject to the computer charts and operation manual both supplied with the crane.

LOAD CHART

CROSSOVER 6000

With Jib, Extended

11,500 lbs (100%) 360°

Standard ASME B30.5

32 ft Offsettable Jib								
0°			15°			30°		
ft	lbs	lbs	ft	lbs	lbs	ft	lbs	lbs
38	12,500	12,500	47	8,500	8,500	53	6,400	6,400
43	12,000	11,800	52	8,100	8,100	58	6,200	6,200
48	11,500	11,200	57	7,800	7,800	62	6,100	6,100
56	10,900	10,300	64	7,500	7,500	69	5,900	5,900
63	9,900	8,500	70	7,100	7,100	76	5,900	5,900
70	9,200	8,800	77	6,700	6,700	82	5,600	5,600
77	8,900	8,200	83	6,400	6,400	87	5,400	5,400
85	7,900	7,600	91	6,200	6,200	95	5,300	5,300
93	7,200	6,600	98	5,900	5,900	101	5,200	5,200
100	6,100	5,600	104	5,600	5,200	107	5,100	5,100
106	5,200	4,700	110	5,000	4,400	113	4,900	4,400
113	4,400	3,800	117	4,300	3,700	118	4,200	3,700
121	3,600	3,100	124	3,600	3,000	124	3,500	3,000
127	3,000	2,500	129	3,000	2,500			
133	2,600	2,000	134	2,400	2,000			
139	400	400						

57 ft Offsettable Jib								
0°			15°			30°		
ft	lbs	lbs	ft	lbs	lbs	ft	lbs	lbs
47	6,500	6,500	64	4,500	4,500	73	3,300	3,300
54	6,400	6,400	69	4,300	4,300	78	3,200	3,200
60	6,200	6,200	75	4,100	4,100	83	3,100	3,100
69	6,000	6,000	83	3,900	3,900	90	3,000	3,000
78	5,400	5,400	90	3,700	3,700	97	2,900	2,900
86	4,900	4,900	97	3,500	3,500	103	2,800	2,800
94	4,500	4,500	104	3,300	3,300	109	2,700	2,700
104	4,200	4,200	113	3,100	3,100	117	2,600	2,600
113	3,800	3,400	120	2,900	2,900	124	2,500	2,500
121	3,500	3,000	128	2,800	2,800	130	2,500	2,500
128	3,200	2,800	134	2,700	2,700	136	2,400	2,400
136	2,800	2,400	141	2,600	2,300	142	2,400	2,300
144	2,300	2,000	148	2,300	1,800	149	2,200	
152	1,900	1,600	155	1,800	1,400			
159	1,400	1,100	160	1,300	1,000			
164	300	300						

Notes to lifting capacity

Lifting capacities do not exceed 85% of tipping load. Weight of hook blocks and slings is part of the load, and is to be deducted from the capacity ratings. Consult operation manual for further details.

Note: Data published herein is intended as a guide only and shall not be construed to warrant applicability for lifting purposes. Crane operation is subject to the computer charts and operation manual both supplied with the crane.

LOAD CHART

CROSSOVER 6000

With Jib, Extended

7,500 lbs (100%) 360°

Standard ASME B30.5

32 ft Offsettable Jib								
0°			15°			30°		
ft	lbs	lbs	ft	lbs	lbs	ft	lbs	lbs
38	12,500	12,500	47	8,500	8,500	53	6,400	6,400
43	11,800	11,800	52	8,100	8,100	58	6,200	6,200
49	11,200	11,200	57	7,800	7,800	63	6,100	6,100
56	10,300	10,300	64	7,500	7,500	69	5,900	5,900
64	9,500	9,500	71	7,100	7,100	75	5,900	5,900
71	8,800	8,800	77	6,700	6,700	82	5,600	5,600
77	8,200	8,200	83	6,400	6,400	87	5,400	5,400
85	7,600	7,000	91	6,200	6,200	94	5,300	5,300
93	6,500	5,700	98	5,900	5,300	101	5,200	5,100
100	5,500	4,700	105	5,200	4,400	107	5,000	4,300
106	4,700	3,900	110	4,400	3,700	113	4,300	3,600
113	3,900	3,100	117	3,700	3,000	119	3,600	2,900
121	3,200	2,400	124	3,000	2,400	125	3,000	2,300
127	2,500	1,800	129	2,400	1,900			
133	2,000	1,300	134	1,900	1,500			
140	400	400						

57 ft Offsettable Jib								
0°			15°			30°		
ft	lbs	lbs	ft	lbs	lbs	ft	lbs	lbs
47	6,500	6,500	63	4,500	4,500	73	3,300	3,300
54	6,400	6,400	69	4,300	4,300	79	3,200	3,200
60	6,200	6,200	74	4,100	4,100	84	3,100	3,100
69	6,000	6,000	82	3,900	3,900	91	3,000	3,000
78	5,400	5,400	90	3,700	3,700	98	2,900	2,900
86	4,900	4,900	97	3,500	3,500	105	2,800	2,800
94	4,500	4,500	104	3,300	3,300	111	2,700	2,700
104	4,200	4,200	112	3,100	3,100	118	2,600	2,600
112	3,800	3,800	120	2,900	2,900	126	2,500	2,500
120	3,500	3,400	127	2,800	2,800	132	2,500	2,500
128	2,800	2,800	134	2,700	2,700	137	2,400	2,200
136	2,000	2,000	141	2,000	2,000	143	2,000	1,700
144	1,600	1,600	148	1,600	1,600	149	1,600	1,200
152	1,200	1,200	155	1,400	1,200			
158	1,000	800	160	1,000				
165	300	300						

Notes to lifting capacity

Lifting capacities do not exceed 85% of tipping load. Weight of hook blocks and slings is part of the load, and is to be deducted from the capacity ratings. Consult operation manual for further details.

Note: Data published herein is intended as a guide only and shall not be construed to warrant applicability for lifting purposes. Crane operation is subject to the computer charts and operation manual both supplied with the crane.

LOAD CHART

CROSSOVER 6000

With Jib, Extended

4,500 lbs (100%) 360°

Standard ASME B30.5

32 ft Offsettable Jib								
0°			15°			30°		
ft	lbs	lbs	ft	lbs	lbs	ft	lbs	lbs
37	12,500	12,500	47	8,500	8,500	53	6,400	6,400
43	11,800	11,800	52	8,100	8,100	57	6,200	6,200
48	11,200	11,200	57	7,800	7,800	62	6,100	6,100
56	10,300	10,300	64	7,500	7,500	69	5,900	5,900
63	9,500	9,400	70	7,100	7,100	75	5,900	5,900
70	8,800	8,400	77	6,700	6,700	81	5,600	5,600
77	8,200	7,400	83	6,400	6,400	88	5,400	5,400
85	7,300	6,200	90	6,200	5,900	94	5,300	5,300
92	6,000	5,200	97	5,400	4,800	101	4,800	4,400
99	5,000	4,300	104	4,700	3,900	107	4,300	3,700
105	4,200	3,500	110	4,000	3,100	112	3,800	3,000
112	3,400	2,700	116	3,300	2,400	118	3,300	2,400
120	2,700	1,900	123	2,600	1,600	124	2,600	1,600
126	2,100	1,300	129	2,000	1,000			
133	1,600	800	134	1,500				
140	400	400						

57 ft Offsettable Jib								
0°			15°			30°		
ft	lbs	lbs	ft	lbs	lbs	ft	lbs	lbs
46	6,500	6,500	63	4,500	4,500	73	3,300	3,300
53	6,400	6,400	69	4,300	4,300	79	3,200	3,200
60	6,200	6,200	74	4,100	4,100	84	3,100	3,100
69	6,000	6,000	82	3,900	3,900	91	3,000	3,000
78	5,400	5,400	90	3,700	3,700	98	2,900	2,900
86	4,900	4,900	97	3,500	3,500	104	2,800	2,800
94	4,500	4,500	104	3,300	3,300	110	2,700	2,700
103	4,200	3,800	112	3,100	3,100	118	2,600	2,600
112	3,800	3,100	120	2,900	2,900	126	2,500	2,500
120	3,500	2,400	127	2,700	2,300	131	2,500	2,200
127	2,800	1,900	133	2,300	1,800	137	2,200	1,700
135	2,100	1,400	141	1,900	1,200	143	1,800	1,200
143	1,500	800	148	1,500	700	149	1,300	700
151	1,000							

Notes to lifting capacity

Lifting capacities do not exceed 85% of tipping load. Weight of hook blocks and slings is part of the load, and is to be deducted from the capacity ratings. Consult operation manual for further details.

Note: Data published herein is intended as a guide only and shall not be construed to warrant applicability for lifting purposes. Crane operation is subject to the computer charts and operation manual both supplied with the crane.

Boom, Jib and Rotation

	Four-section full power fully synchronized telelscopic boom	
	Boom length — Retracted Extended	35 ft 110 ft
	Boom maximum tip height	118 ft
	Boom elevation angle range (min. / max.)	-4° / 76°
	Boom head	quick reeving
	Installs only on main boom head Compatible with extendable and fixed swing-on jibs	Single nylon sheave
	5 metallic sheaves	60 T
	Independent outrigger controls	
	Load moment / Rated capacity indicator with work area definition ATB system	
	Optional	
	Swing-On Jib – fixed length – can be offset to 0°, 15° or 30° Maximum tip height with fixed jib Swing-On Jib – adjustable length – can be offset to 0°, 15° or 30° Maximum tip height with extended jib	32 ft 145 ft 33 ft / 57 ft 170 ft
	Optional	
	5 metallic sheaves	40 T
	Top swivel ball with hook and latch	7 T

Boom Rotation

	Foot pedal actuated multi-disc brake and air actuated 360° house lock	
	Hydraulic driven double planetary reduction gear drive	2.8 rev/min

Hoists and Rope

1	Two speeds First layer (no load speed) Fifth layer (no load speed)	Low Speed: 184 ft/min 266 ft/min	High Speed: 369 ft/min 533 ft/min
	First layer Fifth layer	Low Speed: 15,639 lb 10,827 lb	High Speed: 10,827 lb 5,052 lb
	Permissible line pull		9,000 lb
			6 x 19 IWRC IPS
	Maximum useable		561 ft
			0.625 in
	Optional configuration – for auxiliary hoist		
2	Two speeds Fifth layer (no load speed)		High Speed: 533 ft/min
	First layer		Low Speed: 15,639 lb
	Permissible line pull		9,000 lb
	Optional configuration – for main or auxiliary hoist		
			0.625 in rotation resistant, compacted strand 18 x 19
			0.625 in

Hydraulics

HYDR	Three pump system Main boom hoist and telescope tandem pump Outrigger and swing Simultaneous operation of hydraulic functions Two-speed hoist	56.8 / 47.0 gal/min @ 3,500 psi 21 gal/min 2,500 psi
	Full flow with bypass protection Suction Return	250 micron screen 5 micron filter
	Pressurized tank with sight level gauge	117 gal

Upper Operator Cab

Upper cab
Sliding door on left side
Sliding window on the right side
Tilting, tinted glass skylight
Removable front windshield
Six-way adjustable seat with armrest dual-axis electro-proportional joysticks
Joystick control for hoist(s), swing and boom elevation
Foot pedals for swing brake, boom telescope and engine rpm
Hand control for engine rpm

Optional features for upper cab
Air conditioning – hydraulically powered
Heater and air conditioning package – hydraulically powered
Liquid propane (LP) cab heater
Single-axis armrest mounted controls
Work lights

Rated capacity indicator with pictograph display of boom radius, boom angle, boom length, allowable load, actual load and % of allowable load
Settable alarms for swing angle, boom length, boom angle, tip height and work area exclusion zone

Counterweight

Main counterweight with integrated hydraulic removal system is bolted to upper crane structure Hydraulic system allows weights to be removed and attached without additional lifting equipment for placement on carrier deck	4,500 lb counterweight package

		Optional additional counterweight
3,000 lb	– 3,000 lb	7,500 lb total counterweight
3,000 lb 4,000 lb	– 7,000 lb	11,500 lb total counterweight
3,000 lb 4,000 lb 5,000 lb	– 12,000 lb	16,500 lb total counterweight

Outriggers

X-pattern

MAX	**Front: Swing, Out and Down** To outer edge of pad	26 ft
	Rear: Swing, Out and Down To outer edge of pad	26 ft
MID	**Front: Swing, Out and Down**	20 ft
	Rear: Swing, Out and Down	19.5 ft

August 2017. Product specifications and prices are subject to change without notice or obligation. The photographs and/or drawings in this document are for illustrative purposes only. Refer to the appropriate Operator's Manual for instructions on the proper use of this equipment. Failure to follow the corresponding Operator's Manual when using our equipment or to otherwise act responsibly may result in serious injury or death. The only warranty applicable to our equipment is the standard written warranty applicable to the particular product and sale and Terex makes no other warranty, express or implied. Products and services listed may be trademarks, service marks or trade-names of Terex Corporation and/or its subsidiaries in the USA and other countries. All rights are reserved. Terex, the Terex Crown design and Works For You are trademarks of Terex Corporation or its subsidiaries.

© Terex Cranes 2017

Terex Cranes, Global Marketing, Dinglerstraße 24, 66482 Zweibrücken, Germany
Tel. +49 (0) 6332 830, Email: info.cranes@terex.com, www.terexcranes.com

www.terex.com/cranes

Brochure Reference: TC-DS-I-E-Crossover6000-08/17

TEREX®

WORKS FOR YOU.™